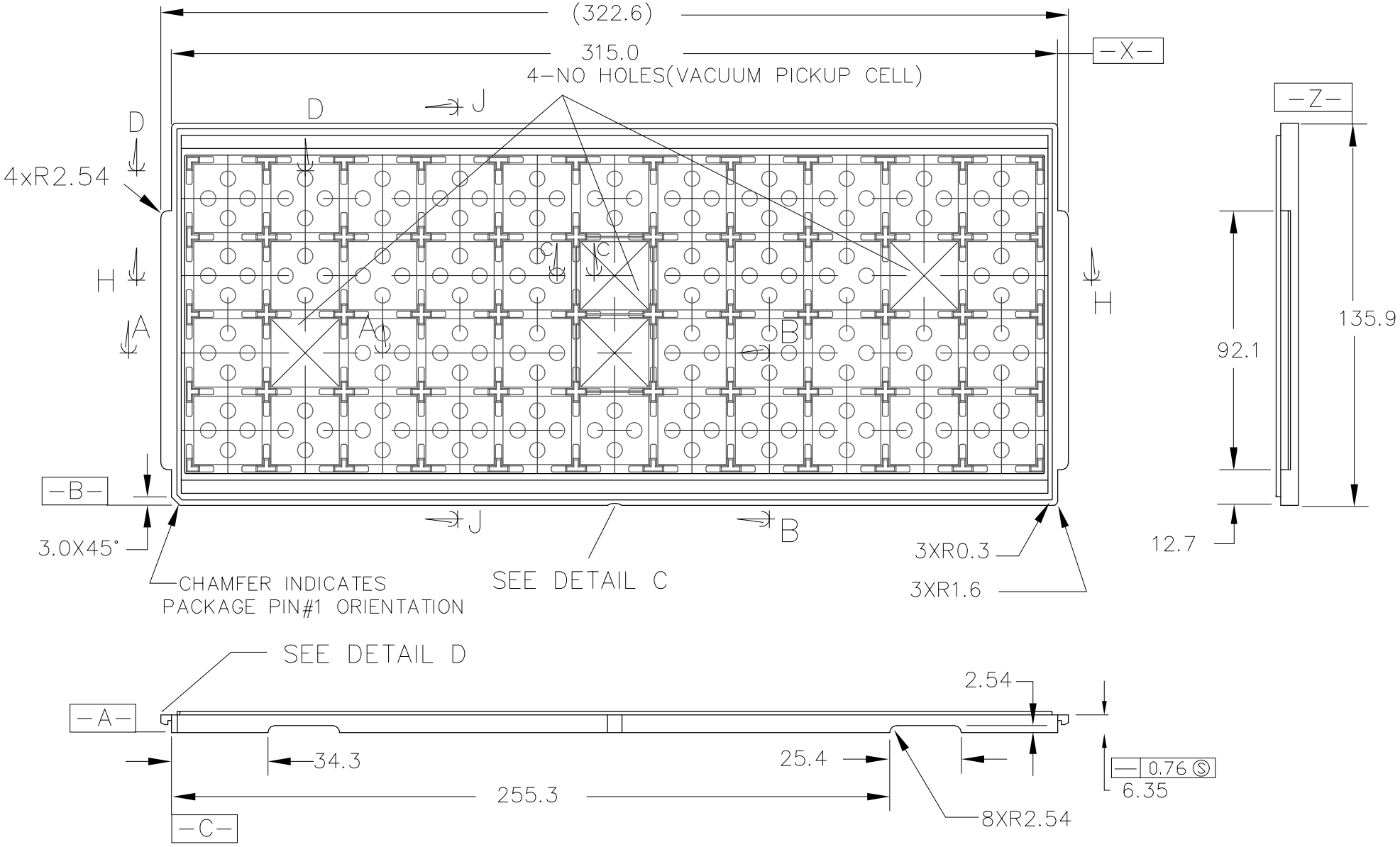

TOLERANCES UNLESS OTHERWISE SPECIFIED			
DECIMAL .X ± .25 .XX ± .13 .XXX ± .13	ANGLE ±.5°		
APPROVALS	DATE		
DRAWN		TITLE: BL/BLG/BR 576, BX/BXG 320 & HM/HMG/HMH/RM 576 SHIPPING TRAY	SCALE N/A SIZE
		STOCK NO. N/A	DRAWING NO. MSC-5790-A	REV 00
		DO NOT SCALE DRAWING	SHEET 1 OF 2

IDT®
www.IDT.com
6024 Silver Creek Valley Road,
San Jose, CA 95138
PHONE: (408) 284-8200
FAX: (408) 284-3572

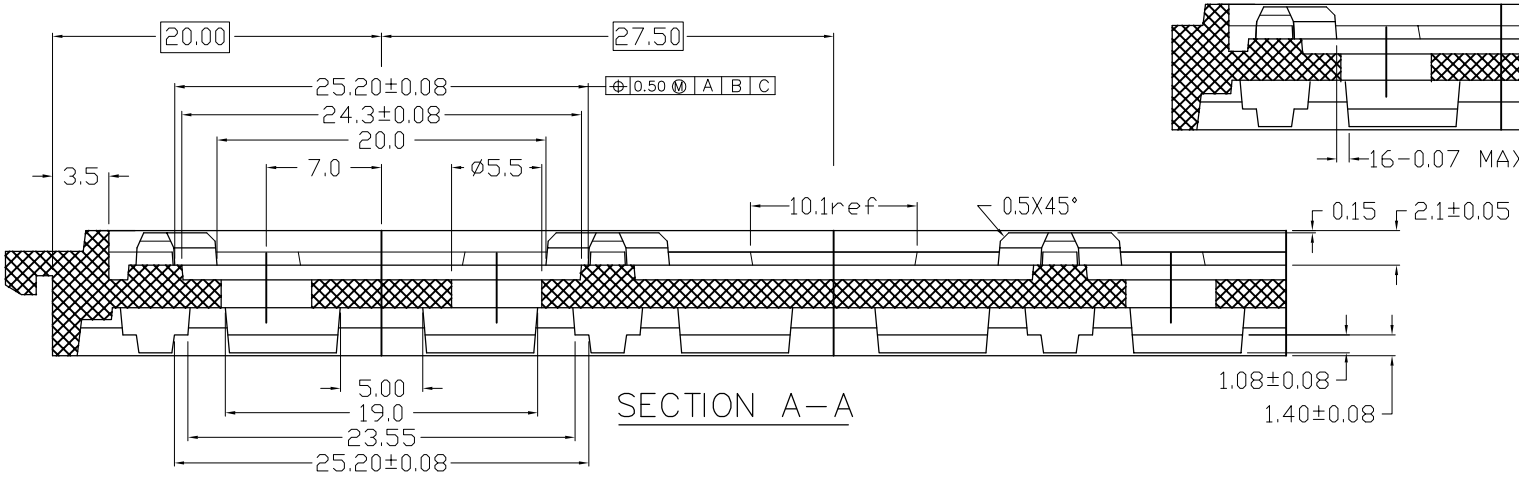

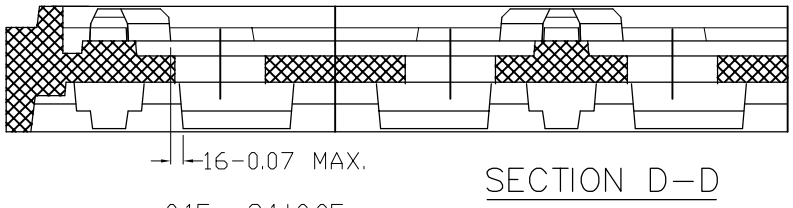

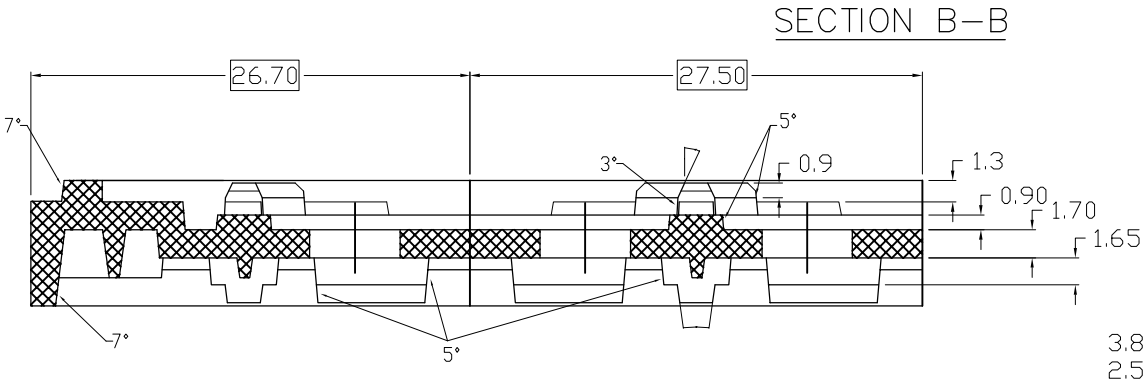

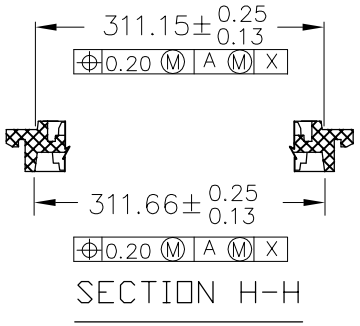

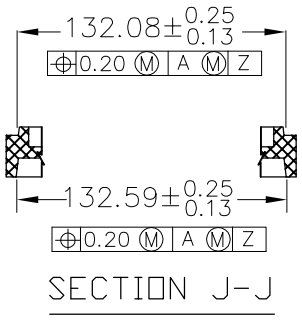

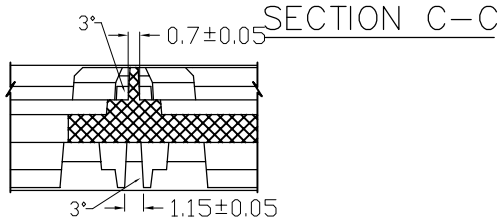

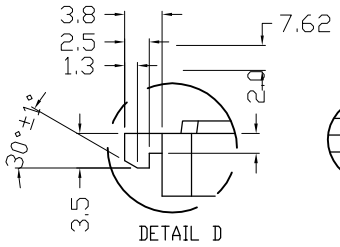

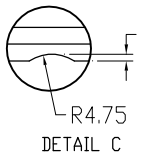

NOTE: SCALLOP IS CENTERED ON SIDE OF TRAY

TOLERANCES UNLESS OTHERWISE SPECIFIED DECIMAL .X ± .25 .XX ± .13 .XXX ± .13 ANGLE ±.5°		IDT® www.IDT.com 6024 Silver Creek Valley Road, San Jose, CA 95138 PHONE: (408) 284-8200 FAX: (408) 284-3572		
APPROVALS	DATE			
DRAWN		TITLE: BL/BLG/BR 576, BX/BXG 320 & HM/HMG/HMH/RM 576 SHIPPING TRAY		SCALE N/A SIZE
		STOCK NO. N/A	DRAWING NO. MSC–5790–A	REV 00
		DO NOT SCALE DRAWING		SHEET 2 OF 2