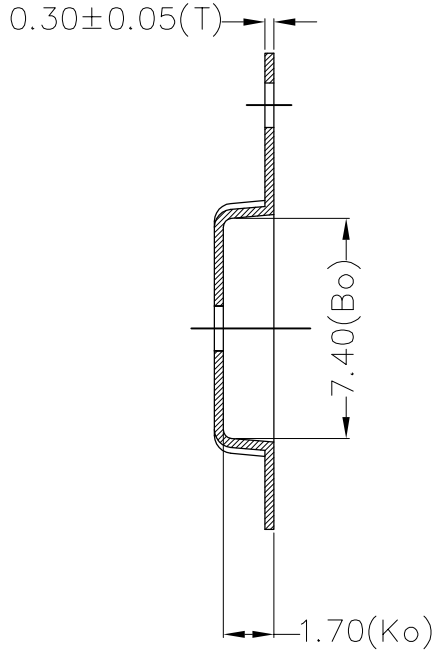

Section B–B

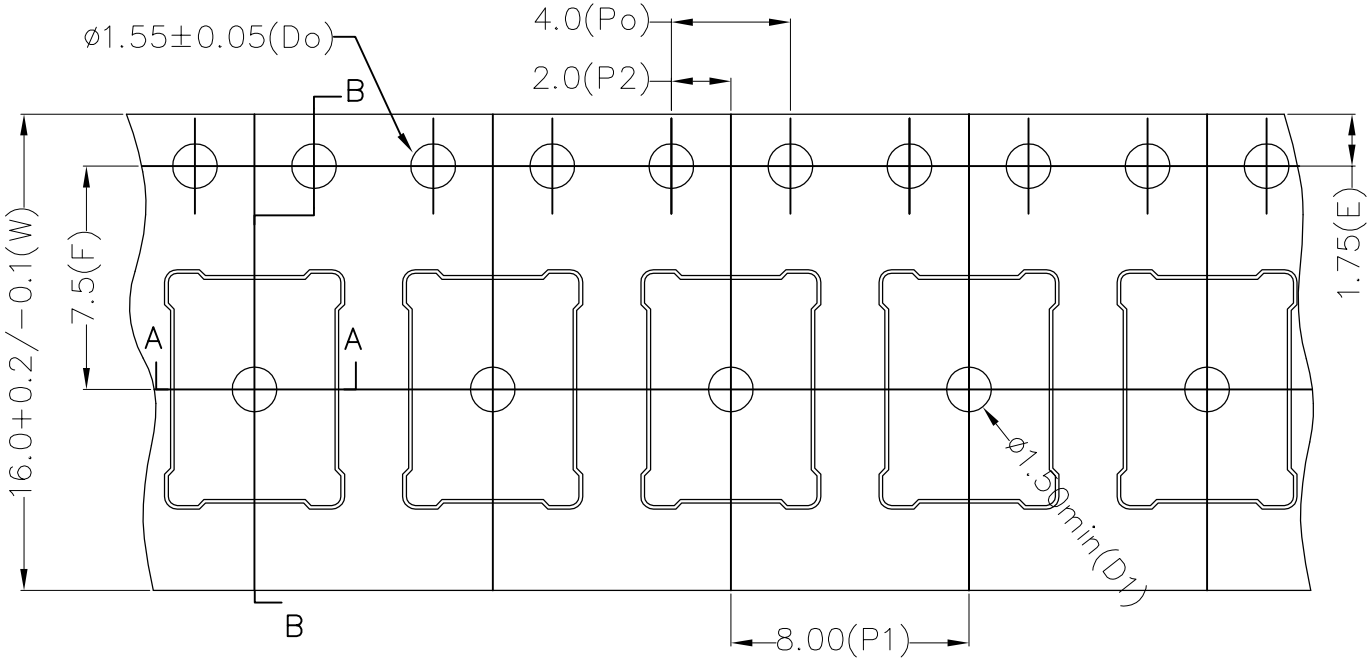

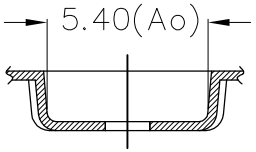

Section A–A

TOLERANCES UNLESS OTHERWISE SPECIFIED DECIMAL ANGLE .X ± .1 .XX ± .10	IDT www.IDT.com	6024 Silver Creek Valley Road, San Jose, CA 95138 PHONE: (408) 284-8200 FAX: (408) 284-3572		
APPROVALS / DATE				
DRAWN	TITLE: JU 4/6 CARRIER TAPE			SCALE N/A SIZE
	STOCK NO. N/A	DRAWING NO. MSC-7770-A		REV 00
	DO NOT SCALE DRAWING		SHEET 1 OF 1	