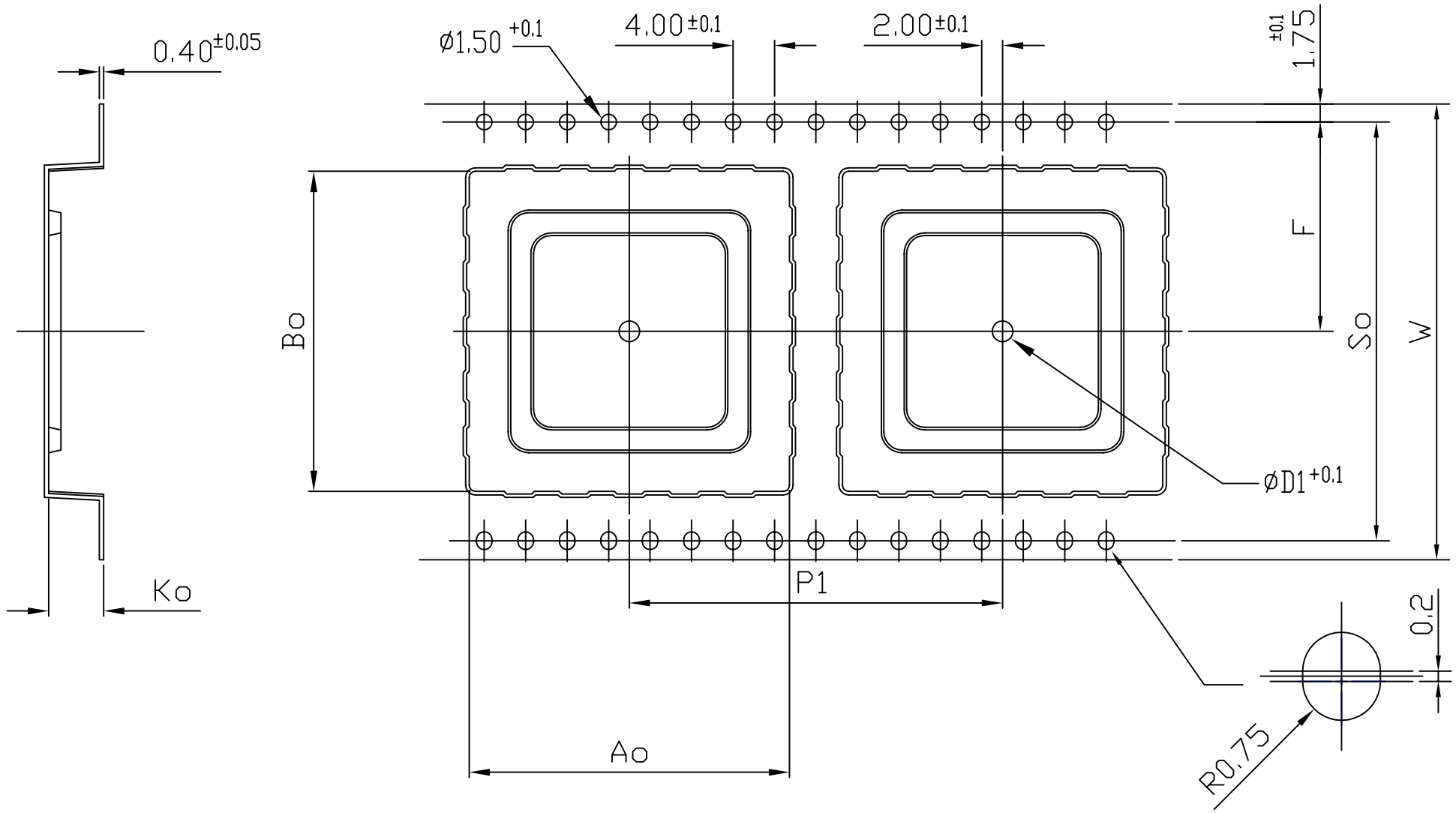

Ao ±0.1	Bo ±0.1	Ko ±0.1	Ki ±0.1	F ±0.1	P1 ±0.1	So ±0.1	D1 ±0.1	W ±0.3
30.9	30.9	5.3	4.1	20.2	36.0	40.4	2.0	44.0

TOLERANCES UNLESS OTHERWISE SPECIFIED
DECIMAL .X ± .25 .XX ± .13 .XXX ± .13
ANGLE ±.5°

APPROVALS	DATE
DRAWN	

IDT®
www.IDT.com

6024 Silver Creek Valley Road,
San Jose, CA 95138
PHONE: (408) 284-8200
FAX: (408) 284-3572

TITLE: PL/PLG 84 CARRIER TAPE

SCALE N/A
SIZE

STOCK NO. N/A
DRAWING NO. MSC-3368-A
REV 01

DO NOT SCALE DRAWING
SHEET 1 OF 1