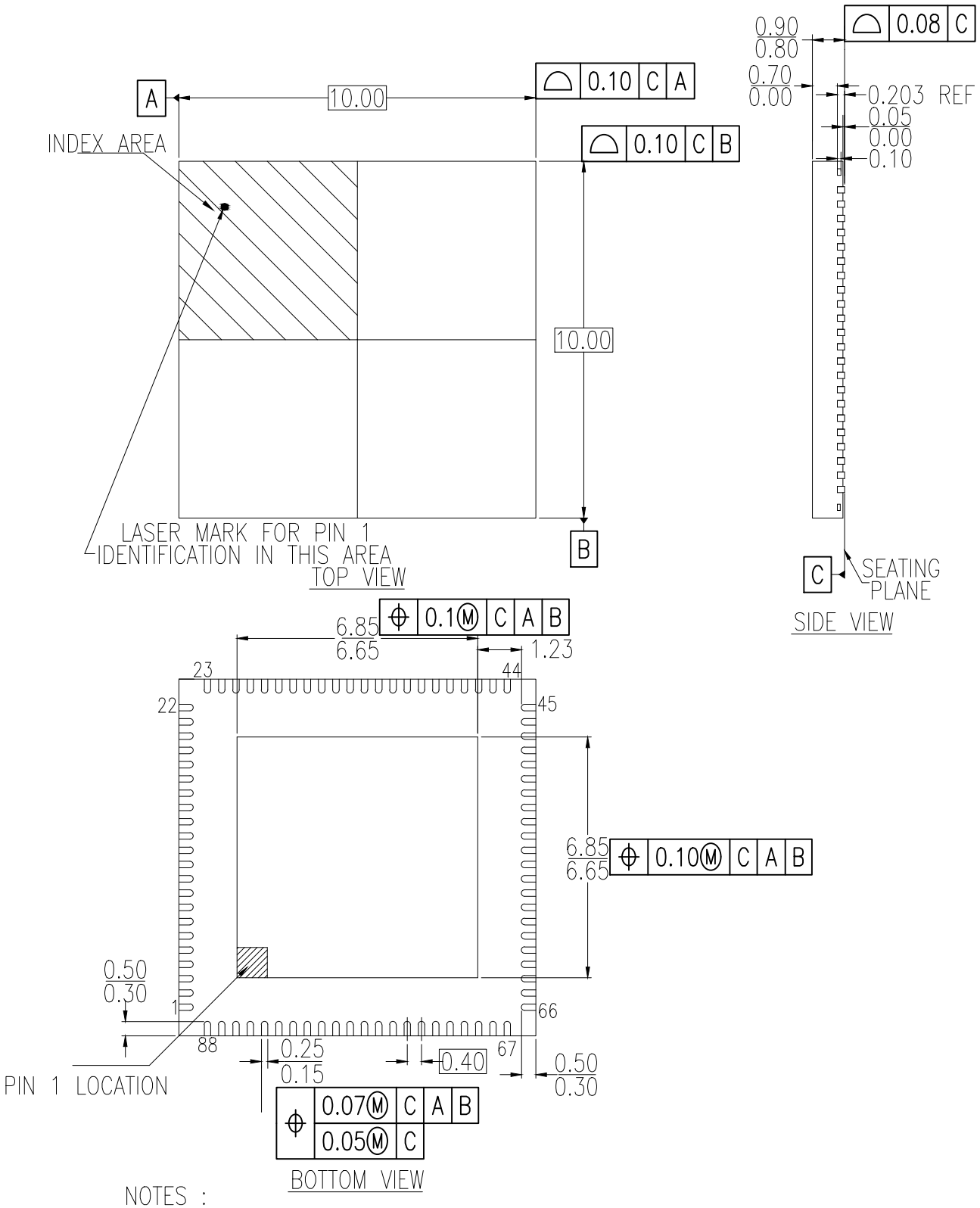

NOTES :
1.ALL DIMENSIONS ARE IN MILLIMETERS.
2.DIMENSIONING & TOLERANCES CONFORM TO ASME Y14.5M. -1994.
3.PIN 1 LOCATION IS IDENTIFIED EITHER BY CHAMFER OR NOTCH.
4.PACKAGE WARPAGE MAX 0.08 MM.

© Renesas Electronics Corporation

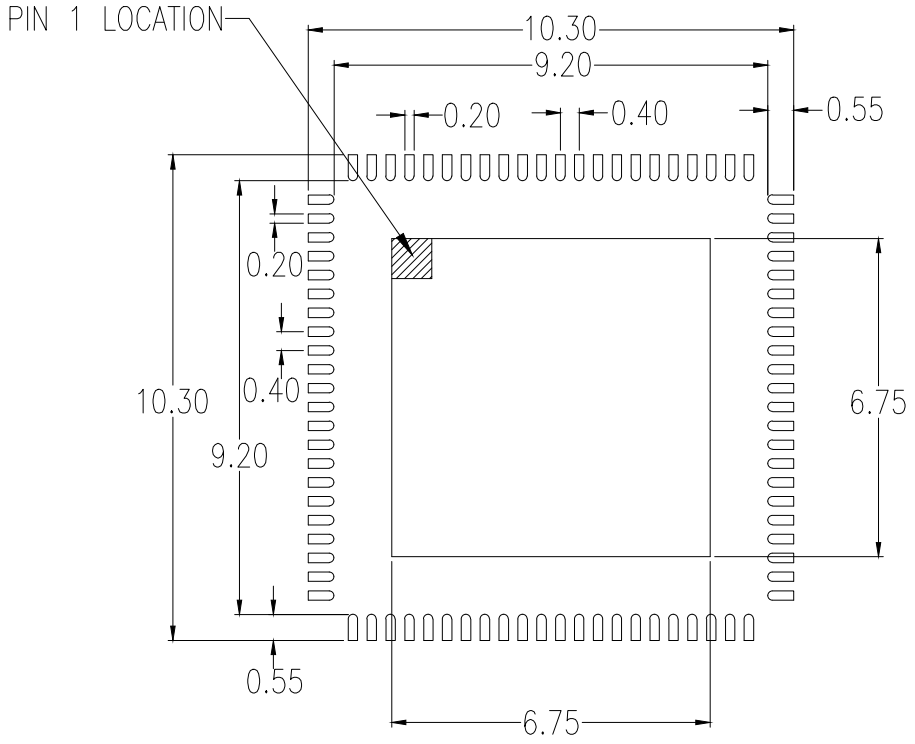

RECOMMENDED LAND PATTERN DIMENSION

NOTES:
1. ALL DIMENSIONS ARE IN MM. ANGLES IN DEGREES.
2. TOP DOWN VIEW. AS VIEWED ON PCB.
3. LAND PATTERN RECOMMENDATION PER IPC-7351B GENERIC REQUIREMENT FOR SURFACE MOUNT DESIGN AND LAND PATTERN.

Package Revision History		
Date Created	Rev No.	Description
March 8, 2018	Rev 01	New Format, Change QFN to VFQFPN, Change Pin 1 Identifier
Jan 28, 2016	Rev 00	Initial Release

© Renesas Electronics Corporation